NORD

COMPUTER SYSTEMS

NORD-1 CONNECTORS

The I/O Channel System
The Data Channel System
Device Connections
The NORD-1 Power System

Written by T. Fledsberg

A/S NORSK DATA-ELEKTRONIKK
Økernveien 145, Oslo 5

NORD-1 CONNECTORS

The I/O Channel System
The Data Channel System
Device Connections
The NORD-1 Power System

Written by T. Fledsberg

REVISION RECORD

Revision	Notes
9/72	New edition superceding all previous versions

Publ. No. ND-01.005.01
September 1972

A/S NORSK DATA-ELEKTRONIKK
Erich Mogensens vei 38, Oslo 5 - Tlf. 21 73 71

A/S NORSK DATA-ELEKTRONIKK	Title: CARD ASSEMBLY	Drawing no. NORD-1.71

	C		D
1	151	1	125
2	128	2	123
3	141	3	124
4	132	4	127
5	106.2	5	131
6	106.1	6	90N40.2
7	140.2	7	90N40.1
8	140.1	8	109
9	150	9	130
10	108.4	10	115
11	102.4	11	126
12	103.4	12	134
13	101.4	13	135
14	108.3	14	136
15	102.3	15	137
16	103.3	16	146
17	101.3	17	133
18	108.2	18	122
19	102.2	19	120
20	103.2	20	163
21	101.2	21	166.1
22	108.1	22	166.2
23	102.1	23	165.1
24	103.1	24	165.2
25	101.1	25	164
26	158/II.4* 6 7 14 15	26	160.1 REA.PCH.
27	158/II.3* 4 5 12 13	27	113 CARD REA.
28	158/II.2* 2 3 10 11	28	179
29	158/II.1* 0 1 8 9	29	160.3 TTY
30	159	30	195
31	169	31	190.1 I/O CH.
32	110	32	504 DATA CH.

*In CPU's with paging system the Paging Buffer 188 is used.

DRAWN BY	Remarks	Replacement for	Date
APPROVED BY	CENTRAL PROCESSING UNIT		
DATE		Replaced by	Date

1 THE I/O CHANNEL SYSTEM

The maximum numbers of I/O channels available on plugs are three. I/O channel number one is reserved A/S Norsk Data-Elektronikk and is connected to the processor via cable card. I/O channel number two and number three are available for the user.

Signal levels for I/O channel are in standard TTL or balanced lines (T.I. 75107 and 75109). Using standard TTL level, the I/O signals are connected to buffer cards in the processor via three cables (control, data in, data out). Using balanced lines, the I/O signals are connected to the buffer cards via two cables (control, data in, data out) and three 185 line driver/receiver cards.

1.1 I/O Control Signals

Balanced lines		Standard TTL lines			
LII	0-5	II	0-5	(CH 1)	Connected to IR (Instruction Register) as described. Polarity of each bit defines device number. Select 1 of 64 devices.
LIY	0-5	IY	0-5	(CH 2)	
LIZ	0-5	IZ	0-5	(CH 3)	
LII	8-10	II	8-10	(CH 1)	Connected to IR.
LIY	8-10	IY	8-10	(CH 2)	ACT (bit 8) Activate the specified device.
LIZ	8-10	IZ	8-10	(CH 3)	SKA (bit 9) Skip if start acceptable.
					PIN (bit 10) Prepare interrupt. Turn on the interrupt system of the specified device.
					These three function bits can also have other meanings, depending on the users definition.
LIO	3	IO	3	(CH 1)	(IOTE) Timing signal from CPU. Defines the period when the CPU is reading the state of a device control card. See diagram under DC (CONNECT).
LIO	4	IO	4	(CH 2)	
LIO	5	IO	5	(CH 3)	
LIC	3	IC	3	(CH 1)	(IOTC) Timing signal from CPU, defined as IOT completion. Can be used by the device control card as a start command from CPU. See diagram under DC.
LIC	4	IC	4	(CH 2)	
LIC	5	IC	5	(CH 3)	

Balanced lines	Standard TTL lines		
Not in use	TSX TSY TSZ	(CH 1) (CH 2) (CH 3)	Static I/O test signal generated by the Cambridge Control 169 card. (Example of use: In this mode the Simplex Control 160 card operates independently of return signals from device, running at maximum speed synchronized with CPU.)
LDC 3	DC 3	(CH 1)	(CONNECT) DC4=104·IY5x·IY4x·IY3x·IY2x·IY1x·IY0x

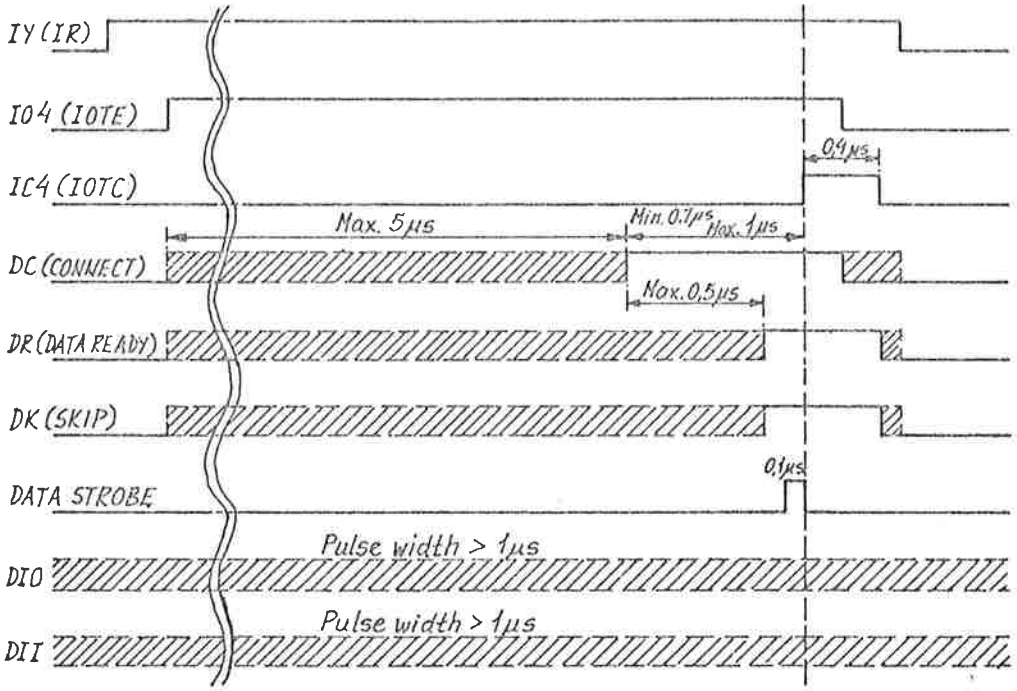

Data strobe is dependent on the DATA READY signal. The time delay from CONNECT is received by the CPU until data is strobed into A-register is minimum 450 ns and maximum 750 ns.

The duration of IOTE is determined by the CONNECT signal and is minimum 750 ns when CONNECT is returned immediately. Maximum length is 10 µs if no CONNECT is received.

Balanced lines	Standard TTL lines		
LDK 3 LDK 4 LDK 5	DK 3 DK 4 DK 5	(CH 1) (CH 2) (CH 3)	(SKIP) The skip signal is sensed at the same time as DATA READY. (See diagram and text under CONNECT.) If SKIP is true, the next instruction in the program is bypassed.
LDR 3 LDR 4 LDR 5	DR 3 DR 4 DR 5	(CH 1) (CH 2) (CH 3)	(DATA READY) Read the "data in lines" into the A register. DATA READY is also used to switch the 185 line driver/receiver cards from send to receive mode.
LDII 3 LDII 4 LDII 5	DII 3 DII 4 DII 5	(CH 1) (CH 2) (CH 3)	Interrupt signal from one-way devices, or input interrupt from two-way devices. Interrupt level 11.
LDIO 3 LDIO 4 LDIO 5	DIO 3 DIO 4 DIO 5	(CH 1) (CH 2) (CH 3)	Output interrupt from two-way devices. Interrupt level 7.
LMCX LMCY LMCZ	MCX MCY MCZ	(CH 1) (CH 2) (CH 3)	Master clear signal from operator panel in N-1.

1.2 I/O Data Signals

Balanced lines	Standard TTL lines		
	DIX DIY DIZ	(CH 1) (CH 2) (CH 3)	Data lines into the A register.
	AX AY AZ	(CH 1) (CH 2) (CH 3)	Data lines from the A register.
LIOX LIOY LIOZ		(CH 1) (CH 2) (CH 3)	Data lines will carry either input or output data depending on the Data Ready signal.

A/S NORSK DATA-ELEKTRONIKK	Title: I/O CHANNEL 2. NORD-1	Drawing no. NORD-1.71

BURNDY PLUG NO.:			BURNDY PLUG		C.P.U.
SIGNAL		POLARITY	SIGNAL	GROUND	POSITION
IC 4	IOTC	0	B	D	D19.51
IO 4	IOTE	0	F	J	D19.43
IY 0	DEV.NR.	0	K	M	D21.11
IY 1	" "	0	L	N	D22.11
IY 2	" "	0	P	S	D21.07
IY 3	" "	0	R	T	D22.07
IY 4	" "	0	U	W	D21.04
IY 5	" "	0	V	X	D22.04
IY 8	ACT	0	Y	AA	D23.34
IY 9	SKA	0	Z	BB	D24.34
IY 10	PIN	0	CC	EE	D23.41
DC 4	CONNECT	0	DD	FF	D19.14
DR 4	DATA READY	0	HH	KK	D19.15
DK 4	SKIP	0	JJ	LL	D19.17
DII 4	INTERRUPT 1	0	MM	PP	D20.15
DIO 4	INTERRUPT 2	0	NN	RR	D20.17
TSY	TEST	0	SS	UU	D23.50
MCY	MASTER CLEAR	0	A	C	D24.50

FEMALE-PLUG ON THE PLUG PANEL

DRAWN BY	Remarks	Replacement for	Date
APPROVED BY	CONTROL	Replaced by	Date
DATE			

A/S NORSK DATA-ELEKTRONIKK	Title: I/O CHANNEL 2. NORD-1	Drawing no. NORD-1.71

BURNDY PLUG NO.:		BURNDY PLUG		C.P.U.
SIGNAL	POLARITY	SIGNAL	GROUND	POSITION
AY 0	0	B	D	D21.41
AY 1	0	E	H	D21.29
AY 2	0	F	J	D21.24
AY 3	0	K	M	D21.21
AY 4	0	L	N	D22.41
AY 5	0	P	S	D22.29
AY 6	0	R	T	D22.24
AY 7	0	U	W	D22.21
AY 8	0	V	X	D21.55
AY 9	0	Y	AA	D21.49
AY 10	0	Z	BB	D21.45
AY 11	0	CC	EE	D21.14
AY 12	0	DD	FF	D22.55
AY 13	0	HH	KK	D22.49
AY 14	0	JJ	LL	D22.45
AY 15	0	MM	PP	D22.14

FEMALE-PLUG ON THE PLUG PANEL

DRAWN BY	Remarks	Replacement for	Date
APPROVED BY	DATA OUT	Replaced by	Date
DATE			

A/S NORSK DATA-ELEKTRONIKK	Title: I/O CHANNEL 2. NORD-1	Drawing no. NORD-1.71

BURNDY PLUG NO.:		BURNDY PLUG		C.P.U.
SIGNAL	POLARITY	SIGNAL	GROUND	POSITION
DIY 0	1	B	D	D23.12
DIY 1	1	E	H	D23.17
DIY 2	1	F	J	D23.20
DIY 3	1	K	M	D23.24
DIY 4	1	L	N	D23.28
DIY 5	1	P	S	D23.37
DIY 6	1	R	T	D23.46
DIY 7	1	U	W	D23.53
DIY 8	1	V	X	D24.12
DIY 9	1	Y	AA	D24.17
DIY 10	1	Z	BB	D24.20
DIY 11	1	CC	EE	D24.24
DIY 12	1	DD	FF	D24.28
DIY 13	1	HH	KK	D24.37
DIY 14	1	JJ	LL	D24.46
DIY 15	1	MM	PP	D24.53

FEMALE-PLUG ON THE PLUG PANEL

DRAWN BY	Remarks	Replacement for	Date
APPROVED BY	DATA IN	Replaced by	Date
DATE			

A/S NORSK DATA-ELEKTRONIKK	Title: I/O CHANNEL 3 NORD-1	Drawing no. NORD-1.71

BURNDY PLUG NO.:			BURNDY PLUG		C.P.U.
SIGNAL		POLARITY	SIGNAL	GROUND	POSITION
IC 5	IOTC	0	B	D	D19.52
IO 5	IOTE	0	F	J	D19.44
IZ 0	DEV.NO.	0	K	M	D21. 9
IZ 1	" "	0	L	N	D22. 9
IZ 2	" "	0	P	S	D21. 6
IZ 3	" "	0	R	T	D22. 6
IZ 4	" "	0	U	W	D21. 5
IZ 5	" "	0	V	X	D22. 5
IZ 8	ACT	0	Y	AA	D23.31
IZ 9	SKA	0	Z	BB	D24.31
IZ 10	PIN	0	CC	EE	D23.42
DC 5	CONNECT	0	DD	FF	D19.13
DR 5	DATA READY	0	HH	KK	D19.12
DK 5	SKIP	0	JJ	LL	D19.16
DII 5	INTERRUPT 1	0	MM	PP	D20.16
DIO 5	INTERRUPT 2	0	NN	RR	D20.20
TSZ	TEST	0	SS	UU	D23.58
MCZ	MASTER CLEAR	0	A	C	D24.58

FEMALE-PLUG ON THE PLUG PANEL

DRAWN BY	Remarks	Replacement for	Date
APPROVED BY	CONTROL	Replaced by	Date
DATE			

A/S NORSK DATA-ELEKTRONIKK	Title: I/O CHANNEL 3 NORD-1	Drawing no. NORD-1.71

BURNDY PLUG NO.:		BURNDY PLUG		C.P.U.
SIGNAL	POLARITY	SIGNAL	GROUND	POSITION
AZ 0	0	B	D	D21.44
AZ 1	0	E	H	D21.30
AZ 2	0	F	J	D21.36
AZ 3	0	K	M	D21.16
AZ 4	0	L	N	D22.44
AZ 5	0	P	S	D22.30
AZ 6	0	R	T	D22.36
AZ 7	0	U	W	D22.16
AZ 8	0	V	X	D21.58
AZ 9	0	Y	AA	D21.50
AZ 10	0	Z	BB	D21.46
AZ 11	0	CC	EE	D21.15
AZ 12	0	DD	FF	D22.58
AZ 13	0	HH	KK	D22.50
AZ 14	0	JJ	LL	D22.46
AZ 15	0	MM	PP	D22.15

FEMALE-PLUG ON THE PLUG PANEL

DRAWN BY	Remarks	Replacement for	Date
APPROVED BY	DATA OUT	Replaced by	Date
DATE			

A/S NORSK DATA-ELEKTRONIKK	Title: I/O CHANNEL 3 NORD-1	Drawing no. NORD-1.71

BURNDY PLUG NO.:		BURNDY PLUG		C.P.U.
SIGNAL	POLARITY	SIGNAL	GROUND	POSITION
DIZ 0	1	B	D	E23. 8
DIZ 1	1	E	H	D23.11
DIZ 2	1	F	J	D23.26
DIZ 3	1	K	M	D23.27
DIZ 4	1	L	N	D23.33
DIZ 5	1	P	S	D23.39
DIZ 6	1	R	T	D23.47
DIZ 7	1	U	W	D23.55
DIZ 8	1	V	X	D24. 8
DIZ 9	1	Y	AA	D24.11
DIZ 10	1	Z	BB	D24.26
DIZ 11	1	CC	EE	D24.27
DIZ 12	1	DD	FF	D24.33
DIZ 13	1	HH	KK	D24.39
DIZ 14	1	JJ	LL	D24.47
DIZ 15	1	MM	PP	D24.55

FEMALE-PLUG ON THE PLUG PANEL

DRAWN BY	Remarks	Replacement for	Date
APPROVED BY	DATA IN	Replaced by	Date
DATE			

A/S NORSK DATA-ELEKTRONIKK	Title: I/O CHANNEL 2 CONTROL WITH CABLE DRIVERS AND RECEIVERS	Drawing no.

NO.	SIGNAL	POL.	CPU 185,3	PLUG	I/O RACK 185,6
1	LIY 0	1	.17	A	.17
		0	.18	C	.18
2	LIY 1	1	.20	B	.20
		0	.22	D	.22
3	LIY 2	1	.24	E	.24
		0	.23	H	.23
4	LIY 3	1	.25	F	.25
		0	.28	J	.28
5	LIY 4	1	.30	K	.30
		0	.29	M	.29
6	LIY 5	1	.31	L	.31
		0	.34	N	.34
7	LIY 8	1	.35	P	.35
		0	.38	S	.38
8	LIY 9	1	.37	R	.37
		0	.40	T	.40
9	LIY 10	1	.42	U	.42
		0	.41	W	.41
10	LMCY	1	.43	V	.43
		0	.46	X	.46
11	LIC 4	1	.11	Y	.11
		0	.12	AA	.12
12	LIO 4	1	.14	Z	.14
		0	.15	BB	.15
13	LDC	1	.48	CC	.48
		0	.47	EE	.47
14	LDR 4	1	.49	DD	.49
		0	.52	FF	.52
15	LDK 4	1	.54	HH	.54
		0	.53	KK	.53
16	LDII 4	1	.55	JJ	.55
		0	.58	LL	.58
17	LDIO 4	1	.05	MM	.05
		0	.06	PP	.06
18		1		NN	
		0	To P2	RR	To P4
19		1		SS	
		0		UU	
20		1		TT	
		0		VV	
21		1		XX	
		0		WW	

DRAWN BY	Remarks	Replacement for	Date
APPROVED BY	CONNECTED TO 185.3 AND 185.6	Replaced by	Date
DATE			

A/S NORSK DATA-ELEKTRONIKK	Title: I/O CHANNEL 2 DATA WITH CABLE DRIVERS AND RECEIVERS	Drawing no.

NO.	SIGNAL	POL.	IN CPU 185,1	PLUG	I/O RACK 185,5	
1	LIOY 0	1	.11	A	.12	
		0	.12	C	.11	
2	LIOY 1	1	.14	B	.15	
		0	.15	D	.14	
3	LIOY 2	1	.17	E	.18	
		0	.18	H	.17	
4	LIOY 3	1	.20	F	.22	
		0	.22	J	.20	
5	LIOY 4	1	.24	K	.23	
		0	.23	M	.24	
6	LIOY 5	1	.25	L	.28	
		0	.28	N	.25	
7	LIOY 6	1	.30	P	.29	
		0	.29	S	.30	
8	LIOY 7	1	.31	R	.34	
		0	.34	T	.31	
9	LIOY 8	1	.35	U	.38	
		0	.38	W	.35	
10	LIOY 9	1	.37	V	.40	
		0	.40	X	.37	
11	LIOY 10	1	.42	Y	.41	
		0	.41	AA	.42	
12	LIOY 11	1	.43	Z	.46	
		0	.46	BB	.43	
13	LIOY 12	1	.48	CC	.47	
		0	.47	EE	.48	
14	LIOY 13	1	.49	DD	.52	
		0	.52	FF	.49	
15	LIOY 14	1	.54	HH	.53	
		0	.53	KK	.54	
16	LIOY 15	1	.55	JJ	.58	
		0	.58	LL	.55	
17		1		MM		
		0	To P1	PP	To P3	
18		1		NN		
		0		RR		
19		1		SS		
		0		UU		
20		1		TT		
		0		VV		
21		1		XX		
		0		WW		

DRAWN BY	Remarks	Replacement for	Date
APPROVED BY	CONNECTED TO 185.1 AND 185.5	Replaced by	Date
DATE			

I/O CHANNEL 2 WITH LINE DRIVERS AND RECEIVERS

CPU

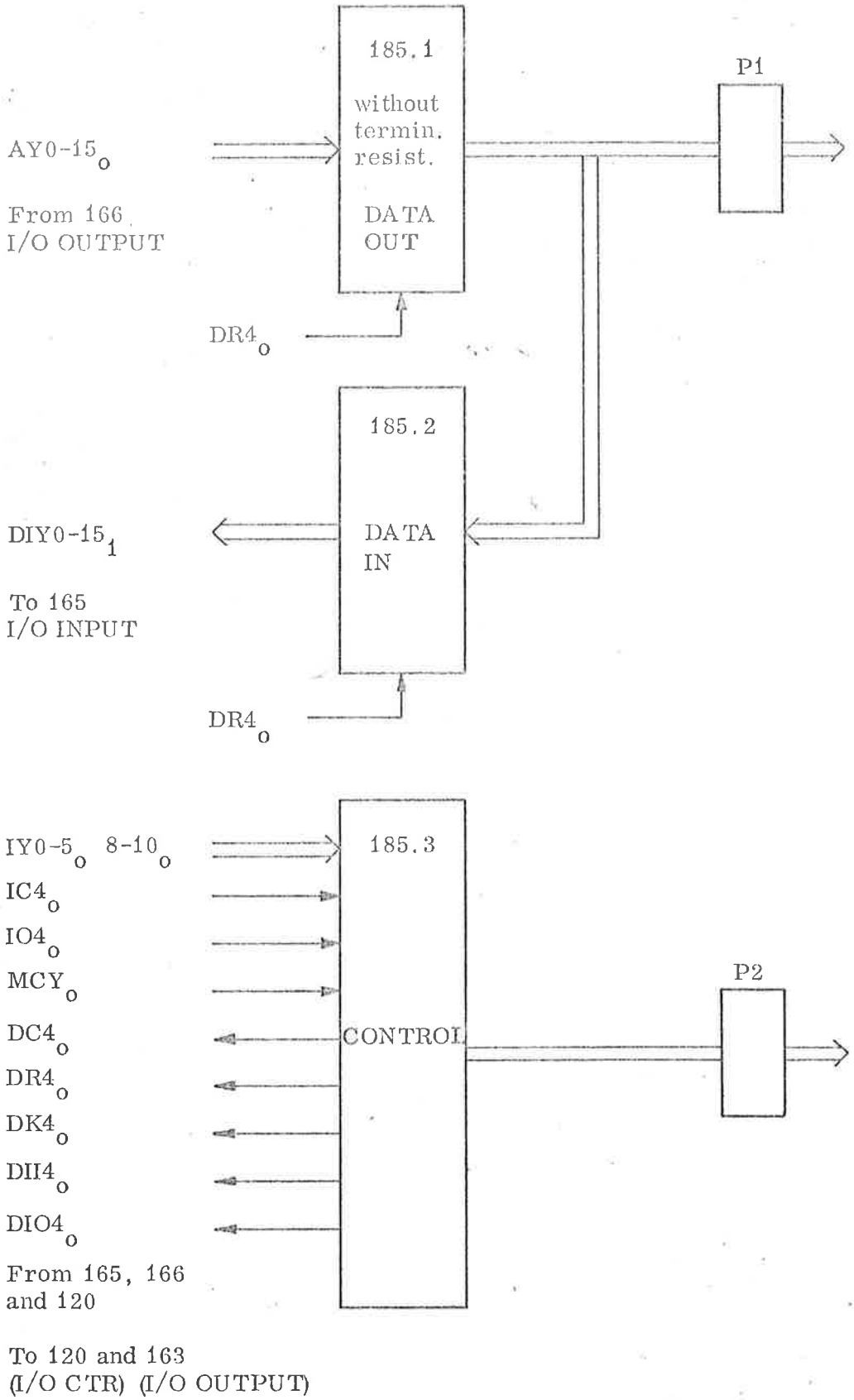

I/O CHANNEL 2 WITH LINE DRIVERS AND RECEIVERS

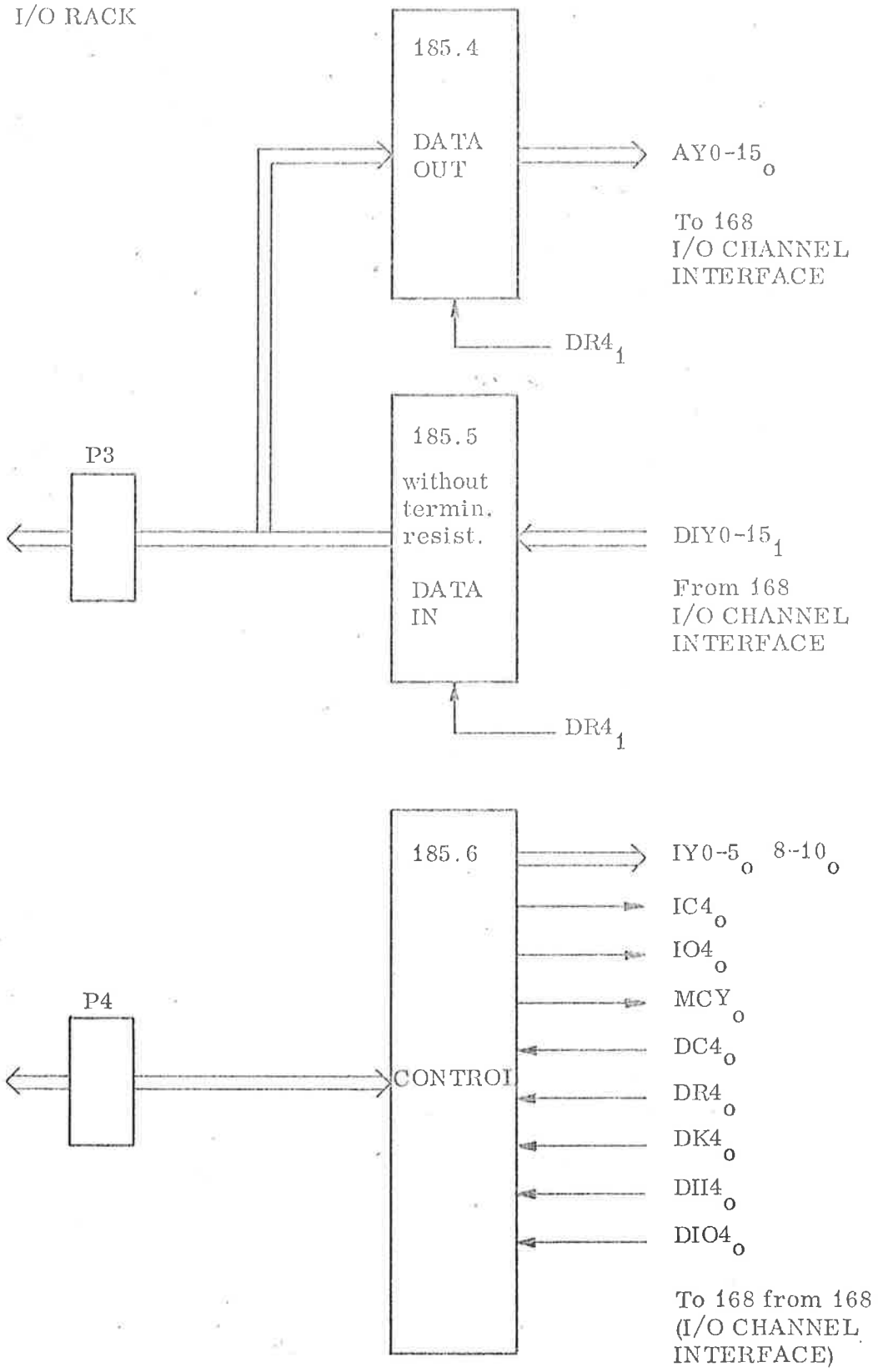

2 THE DATA CHANNEL SYSTEM

The external data channel interface is connected to the memory interface via cable drivers and receivers (185 or 504). The connection is done by means of two connectors, one for address/control and the other for data in/out.

2.1 Data Channel Control Signals

LWRK	(WRITE) Specifies read or write mode depending on polarity.
LRQK	(REQUEST) Request signal to the memory interface.
LRYK	(READY) Ready signal from the memory interface.
LDAK	Address lines.

2.2 Data Channel Data

LDDK	Depending on mode signal polarity (WRITE), the LDDK lines will carry either input or output data.

A/S NORSK DATA-ELEKTRONIKK	Title: DATA CHANNEL K ADDRESS/CONTROL	Drawing no.

NO.	SIGNAL	POL.	CPU	PLUG	I/O RACK	
1	LDAK 0	1	185.9.12	A	185.12.12	
		0	.11	C	.11	
2	LDAK 1	1	.15	B	.15	
		0	.14	D	.14	
3	LDAK 2	1	.18	E	.18	
		0	.17	H	.17	
4	LDAK 3	1	.22	F	.22	
		0	.20	J	.20	
5	LDAK 4	1	.23	K	.23	
		0	.24	M	.24	
6	LDAK 5	1	.28	L	.28	
		0	.25	N	.25	
7	LDAK 6	1	.29	P	.29	
		0	.30	S	.30	
8	LDAK 7	1	.34	R	.34	
		0	.31	T	.31	
9	LDAK 8	1	.38	U	.38	
		0	.35	W	.35	
10	LDAK 9	1	.40	V	.40	
		0	.37	X	.37	
11	LDAK 10	1	.41	Y	.41	
		0	.42	AA	.42	
12	LDAK 11	1	.46	Z	.46	
		0	.43	BB	.43	
13	LDAK 12	1	.47	CC	.47	
		0	.48	EE	.48	
14	LDAK 13	1	.52	DD	.52	
		0	.49	FF	.49	
15	LDAK 14	1	.53	HH	.53	
		0	.54	KK	.54	
16	LDAK 15	1	.58	JJ	.58	
		0	.55	LL	.55	
17	LRQK	1	.05	MM	.05	
		0	.06	PP	.06	
18	LWRK	1	.10	NN	.10	
		0	.09	RR	.09	
19	LRYK	1	185.7.06	SS	185.10.05	
		0	.05	UU	.06	
20		1		TT		
		0		VV		
21		1		XX		
		0		WW		

DRAWN BY	Remarks	185.9 in pos:	Replacement for	Date
APPROVED BY		185.12 in pos:		
DATE		185.7 in pos:	Replaced by	Date
		185.10 in pos:		

A/S NORSK DATA-ELEKTRONIKK	Title: DATA CHANNEL K DATA IN/OUT	Drawing no.

NO.	SIGNAL	POL.	CPU	PLUG	I/O RACK	
1	LDDK 0	1	185.7.12	A	185.11.12	
		0	.11	C	.11	
2	LDDK 1	1	.15	B	.15	
		0	.14	D	.14	
3	LDDK 2	1	.18	E	.18	
		0	.17	H	.17	
4	LDDK 3	1	.22	F	.22	
		0	.20	J	.20	
5	LDDK 4	1	.23	K	.23	
		0	.24	M	.24	
6	LDDK 5	1	.28	L	.28	
		0	.25	N	.25	
7	LDDK 6	1	.29	P	.29	
		0	.30	S	.30	
8	LDDK 7	1	.34	R	.34	
		0	.31	T	.31	
9	LDDK 8	1	.38	U	.38	
		0	.35	W	.35	
10	LDDK 9	1	.40	V	.40	
		0	.37	X	.37	
11	LDDK 10	1	.41	Y	.41	
		0	.42	AA	.42	
12	LDDK 11	1	.46	Z	.46	
		0	.43	BB	.43	
13	LDDK 12	1	.47	CC	.47	
		0	.48	EE	.48	
14	LDDK 13	1	.52	DD	.52	
		0	.49	FF	.49	
15	LDDK 14	1	.53	HH	.53	
		0	.54	KK	.54	
16	LDDK 15	1	.58	JJ	.58	
		0	.55	LL	.55	
17		1		MM		
		0		PP		
18		1		NN		
		0		RR		
19		1		SS		
		0		UU		
20		1		TT		
		0		VV		
21		1		XX		
		0		WW		

DRAWN BY	Remarks	Replacement for	Date
APPROVED BY	185.7 in pos: 185.11 in pos:	Replaced by	Date
DATE			

DATA CHANNEL WITH LINE DRIVERS AND RECEIVERS
CONNECTED TO MULTIPLEXER IN I/O RACK

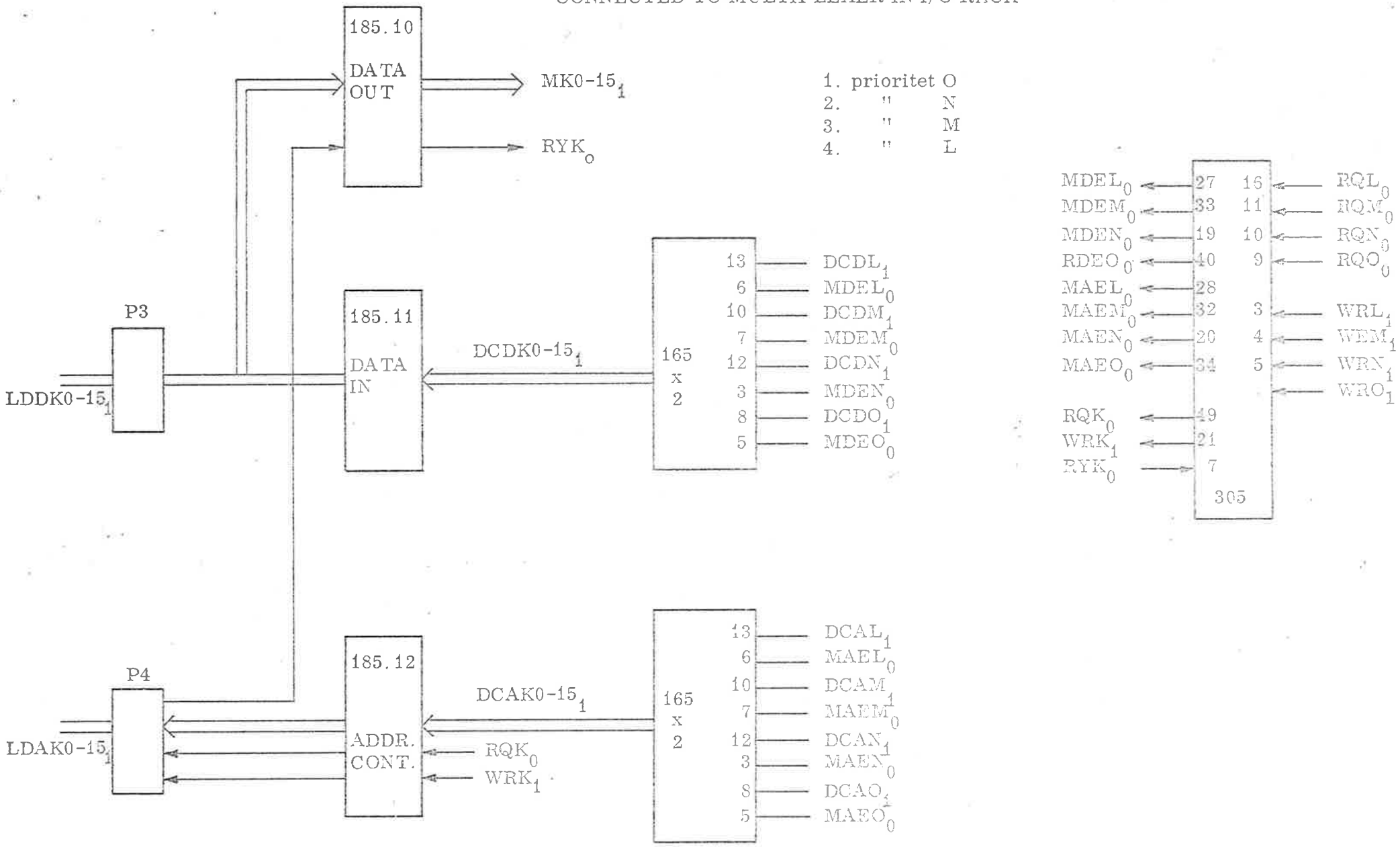

3 DEVICE CONNECTIONS

3.1 Digitronics Tape Reader

Twisted pars in cable	Digitronics plug P1		Burndy plug		CPU	Name	Pol-arity
BROWN/BLUE	D/4	GND	A/C	GND	D25.10	RD0 DATA BIT 0	1
GREY/BLUE	E/5	"	B/D	"	D25.14	RD1 " " 1	1
WHITE/BLUE	F/6	"	E/H	"	D25.24	RD2 " " 2	1
GREEN/BLUE	H/7	"	F/J	"	D25.15	RD3 " " 3	1
BROWN/BLACK	J/8	"	K/M	"	D25.28	RD4 " " 4	1
GREY/BLACK	K/9	"	L/N	"	D25.27	RD5 " " 5	1
GREEN/BLACK	L/10	"	P/S	"	D25.35	RD6 " " 6	1
WHITE/ORANGE	M/11	"	R/T	"	D25.36	RD7 " " 7	1
GREEN/ORANGE	N/12	"	U/W	"	D26.11	RD8 SPROCKET	1
BLUE/ORANGE	18/12	"	V/X	"	D26.13	VD2 DRIVE	1
BLACK/ORANGE	20/12	"	Y/AA	"	D26.14	VD2 STOP	0
BLUE/BLACK	C/B	"	Z/BB	"	D26.44	TAPE IN	0

HUSK: FESTE AV SKJERM TIL LESERPLUGG

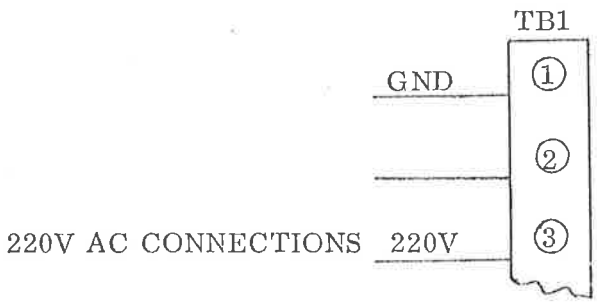

3.2 Facit Punch 4070

Twisted pars in cable	Digitronics plug P1	Burndy plug	CPU	Name
BROWN/BLUE	1/25	A/C	11/20	Ch 1
GREY/BLUE	2/25	B/D	9/16	Ch 2
WHITE/BLUE	3/25	E/H	43/41	Ch 3
BROWN/BLACK	4/25	K/M	27/29	Ch 4
GREY/BLACK	5/25	L/N	47/45	Ch 5
GREEN/BLACK	6/25	P/S	35/29	Ch 6
WHITE/ORANGE	7/25	R/T	17/19	Ch 7
GREEN/ORANGE	8/25	U/W	25/23	Ch 8
GREEN/BLUE	9&11/25	F/J	7/15	Ch 9 SPROCKET
BLUE/ORANGE	12/25	V/X	3/23	PR (COMPLETION)
SKJERM	14&15	Y	/2	

For 12 pars cable
Pin No. 10 to GND (25)
Female plug on the plug panel
FACIT PUNCH BUFFER position in CPU

3.3 NORD-1 Teletype Cabling

Plug terminal	Twisted pars in cable	CPU	Signal
A/B	BROWN/BLACK	.55/.54	Line I2/Line I1
C/D	GREEN/BLACK	.58/.53	Line 02/Line 01
E/F	ORANGE/BLACK	.52/.44	$Start_1/Start_0$
G/H	BLUE/BLACK		

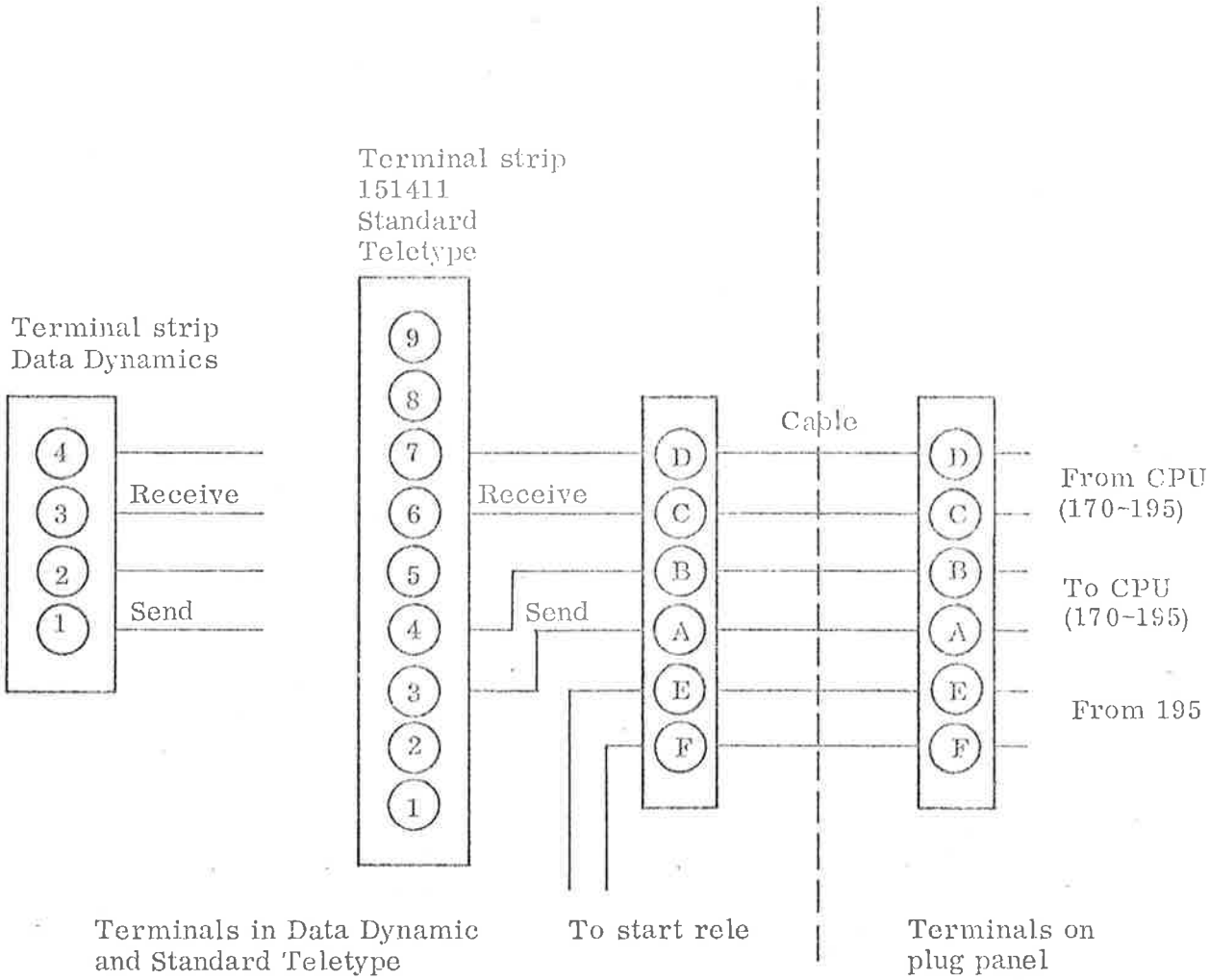

3.4 DP-300 Card Reader Connection

Twisted pars in cable	Burndy plug		Card Reader plug	CPU	Name	Pol-arity
GREY/BLUE	B/D	GND	23/24	. 3	CRD 0 (ROW 9)	0
GREEN/BLUE	F/J	"	21/22	. 4	CRD 1 (" 8)	0
GREY/GREEN	L/N	"	19/20	. 5	CRD 2 (" 7)	0
BROWN/BLACK	R/T	"	17/18	. 6	CRD 3 (" 6)	0
WHITE/BLACK	V/X	"	15/16	.16	CRD 4 (" 5)	0
BROWN/ORANGE	Z/BB	"	13/14	.17	CRD 5 (" 4)	0
WHITE/ORANGE	DD/FF	"	11/12	.18	CRD 6 (" 3)	0
BLUE/ORANGE	JJ/LL	"	9/10	.19	CRD 7 (" 2)	0
BLUE/BLACK	NN/RR	"	7/ 8	.37	CRD 8 (" 1)	0
BROWN/GREY	TT/VV	"	5/ 6	.38	CRD 9 (" 0)	0
BROWN/BLUE	A/C	"	3/ 4	.39	CRD 10 (" 10)	0
WHITE/BLUE	E/H	"	1/ 2	.40	CRD 11 (" 11)	0
BROWN/GREEN	K/M	"	40/41	.56	FEED	1
WHITE/GREEN	P/S	"	32/33	.55	RR (Reader Ready)	1
GREY/BLACK	U/W	"	34/35	.52	CP (Card Present)	0
GREEN/BLACK	Y/AA	"	30/31	.58	C.P.I. Index Pulse	0

DP READER BUFFER 301 in position:
Female Burndy plug on the plug panel

3.5 CDC-9220 Card Reader Connection

Twisted pars in cable	Burndy plug Signal/GRND	AMP plug on card reader	Signal name	Pol-arity	CPU con-nection
GREY/BLUE	B/D	c/n	ROW 9 (CRD 0)	0	.03
GREEN/BLUE	F/J	e/k	" 8 (" 1)	0	.04
GREY/GREEN	L/N	V/Z	" 7 (" 2)	0	.05
BROWN/BLACK	R/T	X/b	" 6 (" 3)	0	.06
WHITE/BLACK	V/X	U/Y	" 5 (" 4)	0	.16
BROWN/ORANGE	Z/BB	W/a	" 4 (" 5)	0	.17
WHITE/ORANGE	DD/FF	L/R	" 3 (" 6)	0	.18
BLUE/ORANGE	JJ/LL	N/T	" 2 (" 7)	0	.19
BLUE/BLACK	NN/RR	K/P	" 1 (" 8)	0	.37
BROWN/GREY	TT/VV	f/m	" 0 (" 9)	0	.38
BROWN/BLUE	A/C	d/j	" 11 (" 10)	0	.39
WHITE/BLUE	E/H	r/v	" 12 (" 11)	0	.40
BROWN/GREEN	K/M	C/H	FEED	0	.56
WHITE/GREEN	P/S	n/t	READER READY	1	.55
GREY/BLACK	U/W	M/S	END DATA	0	.52
GREEN/BLACK	Y/AA	B/F	READ STROBE	0	.58
GREY/ORANGE	CC/EE	D/J	CHECK ERROR	0	.11
GREEN/ORANGE	HH/KK	A/E	DATA READY	0	Not con-nected
BLACK/ORANGE	MM/PP				
WHITE/GREY	SS/UU				
WHITE/BROWN	XX/WW				

CDC Reader Buffer 304 in position:

Female Burndy plug on the plug panel

3.6 CDC-9342 Line Printer Connection

Cable pair colour codes		Burndy plug on CPU end		PIN assignment on buffer card		AMP plug on line printer end		Signal name
Signal	Return	Signal	Return	Signal	Return	Signal	Return	
BROWN	BLUE	A	C	.7	.12	E	F	LP 0
GREY	BLUE	B	D	.6	.12	H	J	LP 1
WHITE	BLUE	E	H	.9	.13	K	L	LP 2
GREEN	BLUE	F	J	.10	.13	M	N	LP 3
BROWN	GREEN	K	M	.19	.21	P	R	LP 4
GREY	GREEN	L	N	.18	.20	S	T	LP 5
WHITE	GREEN	P	S	.17	.20	a	b	Control
BROWN	BLACK	R	T	.51	.53	C	D	CHREQ
GREY	BLACK	U	W	.41	.42	A	B	Strobe
WHITE	BLACK	V	X	.27	.21	NOT CONNECTED		
GREEN	BLACK	Y	AA	.22	.24			Ready
BROWN	ORANGE	Z	BB	.46	.24			MCP
GREY	ORANGE	CC	EE					
WHITE	ORANGE	DD	FF					
BLUE	ORANGE	JJ	LL					
BLACK	ORANGE	MM	PP					
BLUE	BLACK	NN	RR					
WHITE	GREY	SS	UU					
BROWN	GREY	TT	VV					
WHITE	BROWN	XX	WW					

CDC 9342 Line printer buffer 308 in position:

Female Burndy plug on the plug panel.

A twenty-one pair cable should be used.

3.7 Centronics Line Printer Connection

Cable pair colour codes		Burndy plug on CPU end		PIN assignment on buffer card		AMP plug on line printer end		Signal name
Signal	Return	Signal	Return	Signal	Return	Signal	Return	
BROWN	BLUE	A	C	.7	.12	2	20	LP 0
GREY	BLUE	B	D	.6	.12	3	21	LP 1
WHITE	BLUE	E	H	.9	.13	4	22	LP 2
GREEN	BLUE	F	J	.10	.13	5	23	LP 3
BROWN	BLACK	K	M	.19	.21	6	24	LP 4
GREY	BLACK	L	N	.18	.20	7	25	LP 5
GREEN	BLACK	P	S	.17	.20	8	26	LP 6
WHITE	ORANGE	R	T	.51	.53	10	28	Acknowledge
GREEN	ORANGE	U	W	.41	.42	1	19	Strobe
BLUE	ORANGE	V	X	.27	.21	9	27	LP 7
BLACK	ORANGE	Y	AA	.22	.24	not connected	not connected	
BLUE	BLACK	Z	BB	.46	.24	not connected	not connected	

Centronics Buffer 302 in position:

Female Burndy plug on the plug panel.

Twelve pair cable should be used.

3.8 Data Products 2410 & 2470 Line Printer Connection

Cable pair colour codes		Burndy plug on CPU end		PIN assignment on 7132/III buffer card		Line printer end		Signal name
Signal	Return	Signal	Return	Signal	Return	Signal	Return	
BROWN	BLUE	A	C	.7	.12	B	D	LP 0
GREY	BLUE	B	D	.6	.12	F	J	LP 1
WHITE	BLUE	E	H	.9	.13	L	N	LP 2
GREEN	BLUE	F	J	.10	.13	R	T	LP 3
BROWN	BLACK	K	M	.19	.21	V	X	LP 4
GREY	BLACK	L	N	.18	.20	Z	b	LP 5
GREEN	BLACK	P	S	.17	.20	n	k	LP 6
WHITE	ORANGE	R	T	.51	.53	E	C	Demand
GREEN	ORANGE	U	W	.41	.42	j	m	Strobe
BLUE	ORANGE	V	X	.27	.21	p	s	Vertical format
BLACK	ORANGE	Y	AA	.22	.24	not connected	not connected	
BLUE	BLACK	Z	BB	.46	.24	not connected	not connected	

Buffer card in position:

Female Burndy plug on the plug panel.

Twelve pair cable should be used.

4 THE NORD-1 POWER SYSTEM

In this chapter the following drawings are found:

NORD-1 Lay out

Power Panel 1

Power Panel 2

NORD-1 DC Power and Ground System

NORD-1 Noise Filter for the memory

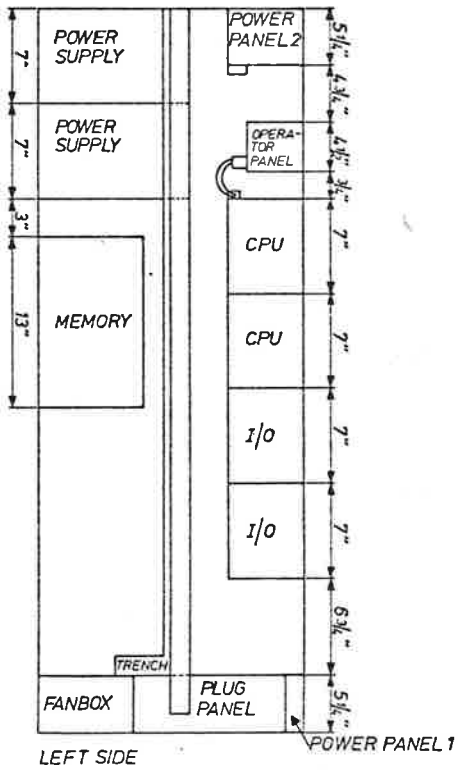

LEFT SIDE

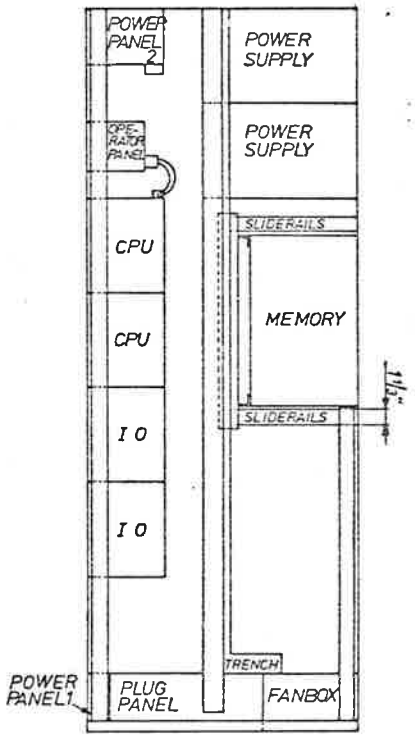

RIGHT SIDE

Mål på hver side av op.panel forandr.	1.3.72	Eeuk
Rettet	Dato	Sign.
NORD-1 LAY OUT	Målestokk	Tegn. BSO 26.11.71
		Kontr. OR
		Appr.
A/S NORSK DATA-ELEKTRONIKK	2B28	

A/S NORSK DATA-ELEKTRONIKK	Title: POWER PANEL 1	Drawing no.

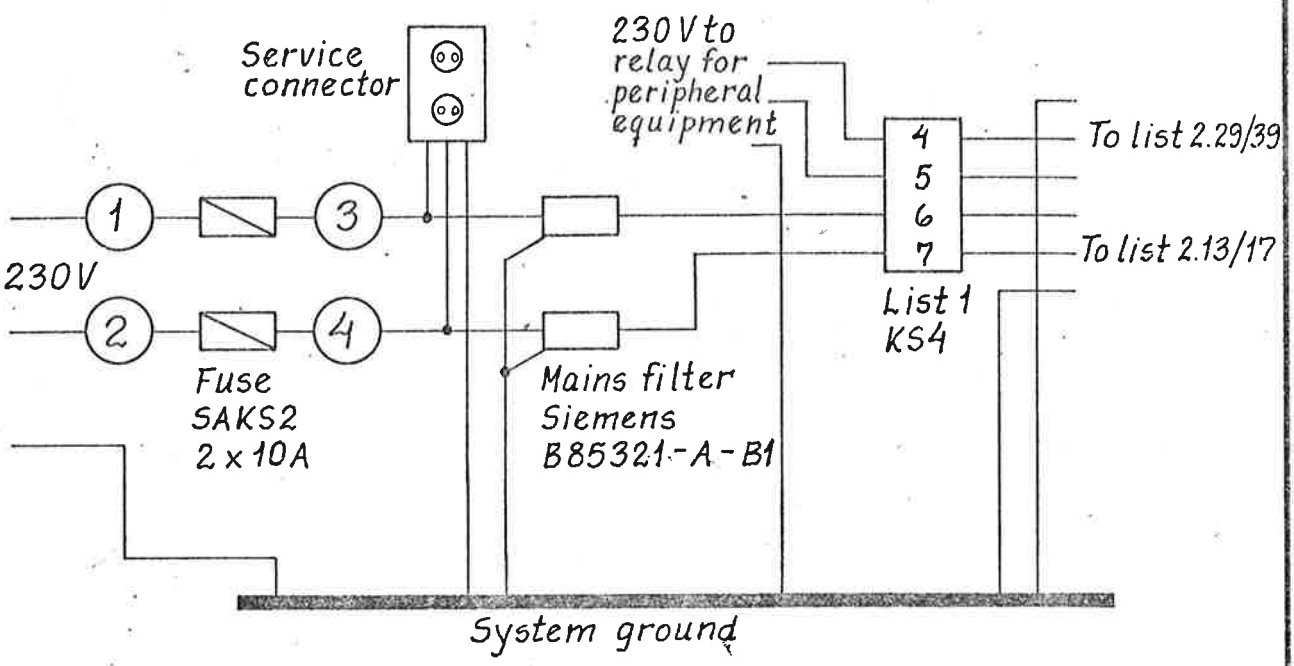

Mains filter

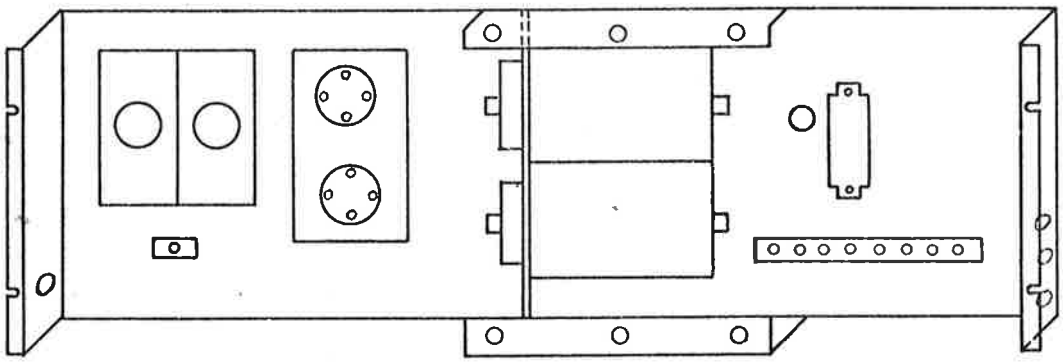

Single wire 1,5 □
Blue: Phase R
Grey: Phase S
Yellow: Power ground

DRAWN BY Eeul	Remarks	Replacement for	Date
APPROVED BY O.R.		Replaced by	Date
DATE 24.11.71			

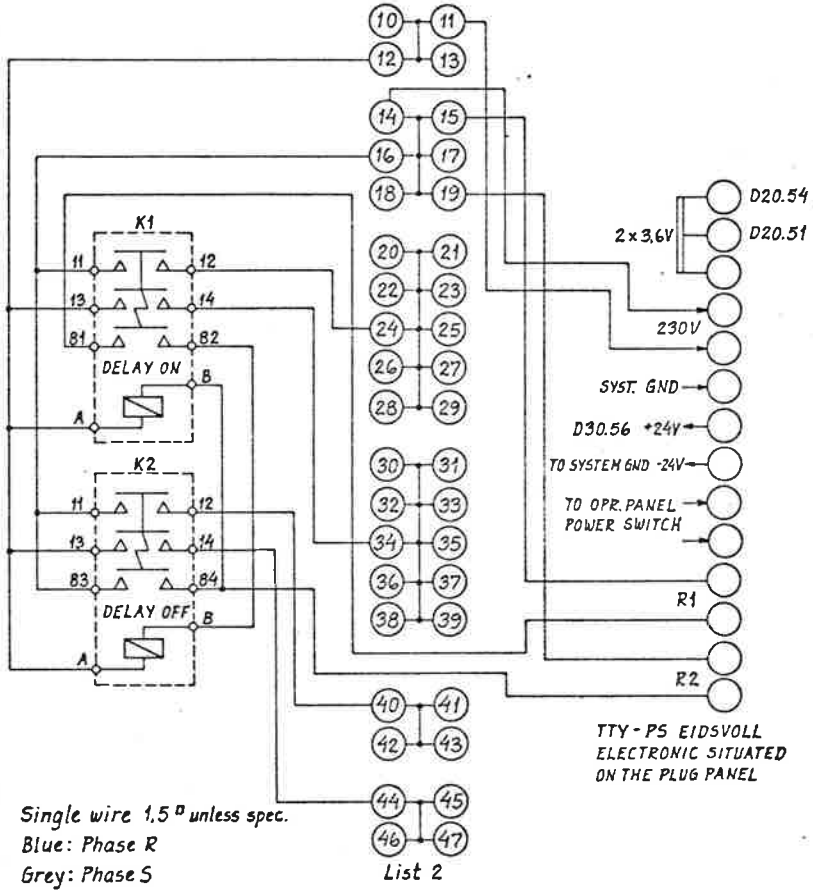

Single wire 1,5 □ unless spec.
Blue: Phase R
Grey: Phase S
Yellow: Power ground

Power connections
List 2

10/18	
13/17	To List 1.6/7
20/30	To fans memory
21/31	To hour meter
22/32	To Power Sense Unit
23/33	
25/35	To CPU PSU +5V
26/36	To spare CPU PSU +5V
27/37	To fans top
28/38	To fans bottom
29/39	To List 1.4/5
41/45	To memory PSU +5V
42/46	To memory PSU -18V
43/47	

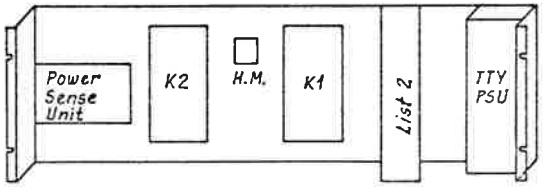

Cable trench fitted on bottom rear side

Rettet	Dato	Sign.
POWER PANEL 2	M.Mestokk	Tegn. 25.11.71
		Kontr. O.R.
		Appr.
A/S NORSK DATA-ELEKTRONIKK	2B26	

ND-01.005.01

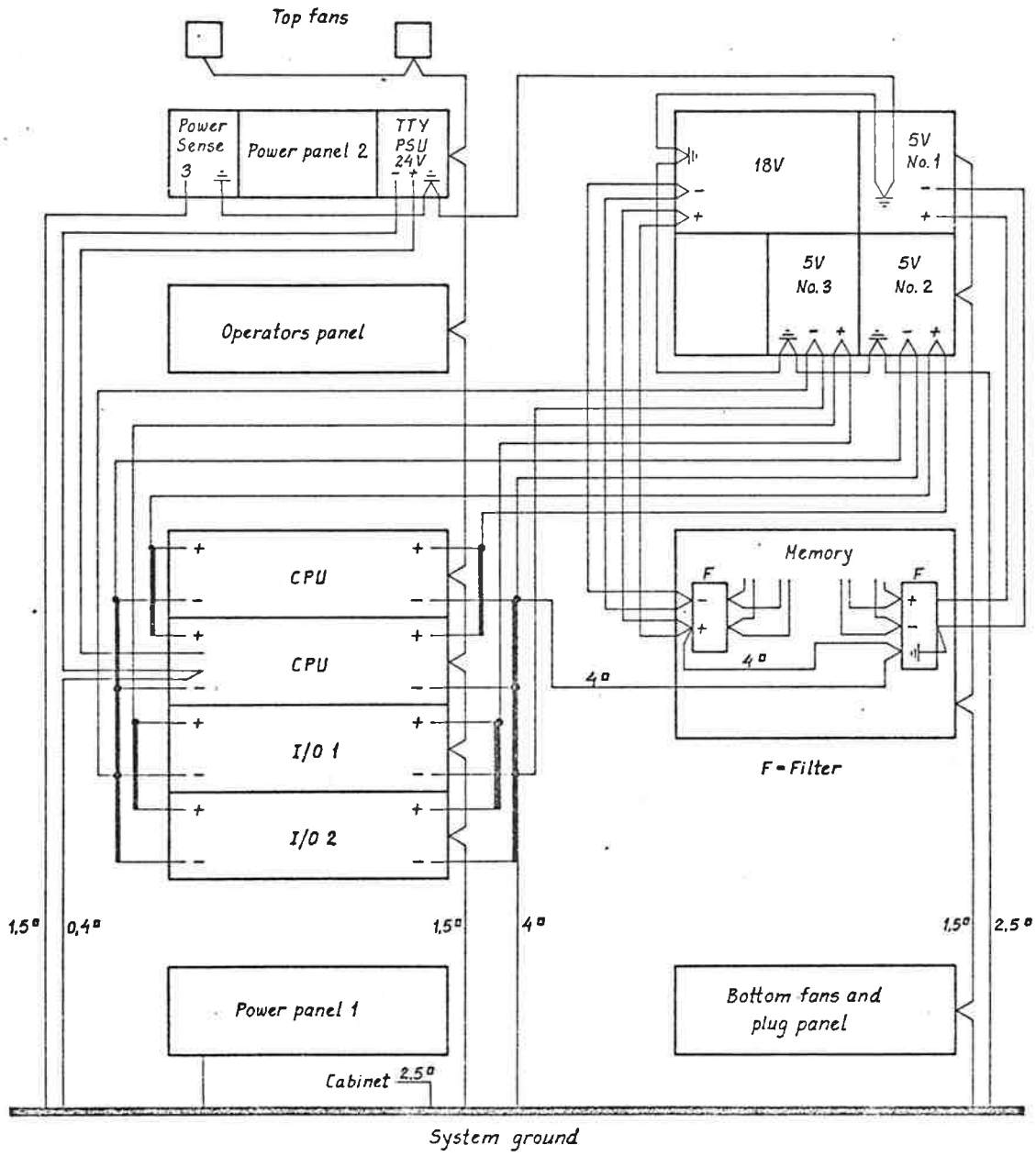

NOTE:

If only 3 CPU racks are used the third 5V PSU is omitted. I/O 1 is then supplied from the first 5V PSU.

All DC wires from power supplies are 4□.

Make sure that both side panels, front and rear door are connected to system ground when fitted, i.e. all lacquer removed from mounting pins and holders, or flexible wire used.

Rettet	Dato	Sign.
NORD-1 DC POWER AND GROUND SYSTEM	Målestokk	Tegn 25.11.71
		Kontr. O.R
		Appr.
A/S NORSK DATA-ELEKTRONIKK	2B27	

ND-01.005.01

A/S NORSK DATA-ELEKTRONIKK	Title: NORD-1 NOISE FILTER	Drawing no.

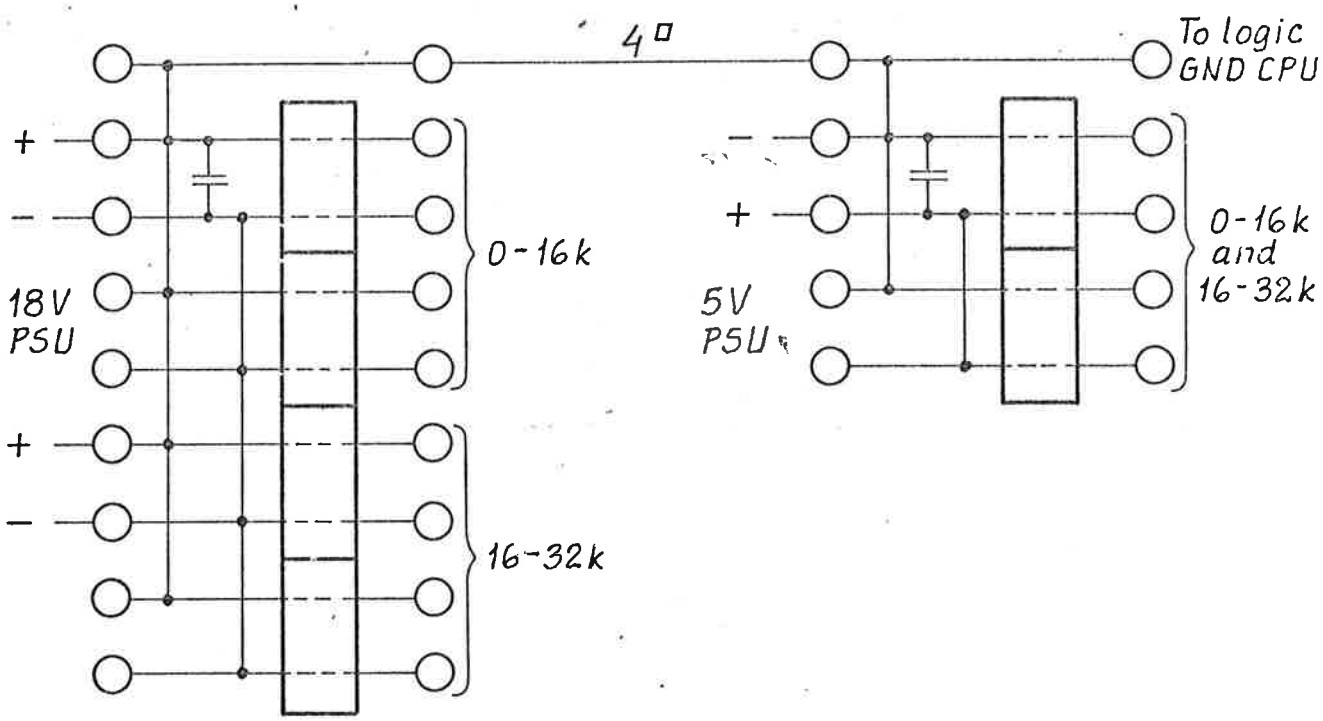

C = 1μF/20/100 Philips Nuggets polycarbonat

L = Philips bead no. 4312 020 31520

DRAWN BY Eeml	Remarks	Replacement for	Date
APPROVED BY O.R.		Replaced by	Date
DATE 25.11.71			

APPENDIX A

A.1 21 Pars Cable

TWISTED PARS IN CABLE	
A BROWN	C /BLUE	1
B GREY	D /BLUE	2
E WHITE	H /BLUE	3
F GREEN	J /BLUE	4
K BROWN	M /GREEN	5
L GREY	N /GREEN	6
P WHITE	S /GREEN	7
R BROWN	T /BLACK	8
U GREY	W /BLACK	9
V WHITE	X /BLACK	10
Y GREEN	AA /BLACK	11
Z BROWN	BB /ORANGE	12
CC GREY	EE /ORANGE	13
DD WHITE	FF /ORANGE	14
HH GREEN	KK /ORANGE	15
JJ BLUE	LL /ORANGE	16
MM BLACK	PP /ORANGE	17
NN BLUE	RR /BLACK	18
SS WHITE	UU /GREY	19
TT BROWN	VV /GREY	20
XX WHITE	WW /BROWN	21

A.2 12 Pars Cable

TWISTED PARS IN CABLE		
A BROWN	C /BLUE	1
B GREY	D /BLUE	2
E WHITE	H /BLUE	3
F GREEN	J /BLUE	4
K BROWN	M /BLACK	5
L GREY	N /BLACK	6
P GREEN	S /BLACK	7
R WHITE	T /ORANGE	8
U GREEN	W /ORANGE	9
V BLUE	X /ORANGE	10
Y BLACK	AA /ORANGE	11
Z BLUE	BB /BLACK	12

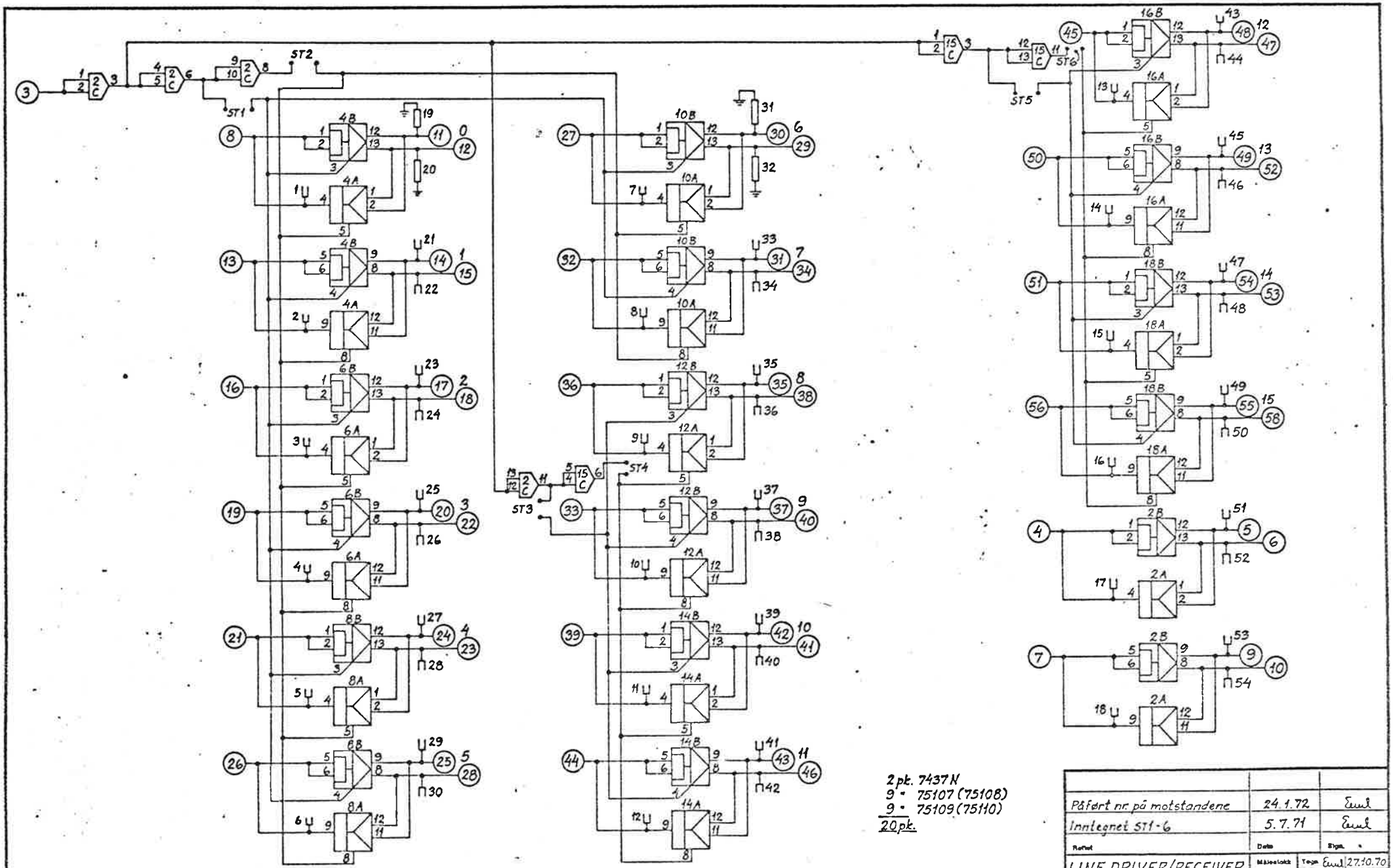

Påført nr på motstandene	24.1.72	Eml
Innlegnet ST1-6	5.7.71	Eml
Rettet	Dato	Sign.
LINE DRIVER/RECEIVER 185	Målestokk	Tegn. Eml 27.10.70
		Kontr.
		Godk.
A/S NORSK DATA-ELEKTRONIKK	2A85	

ND-01.005.01

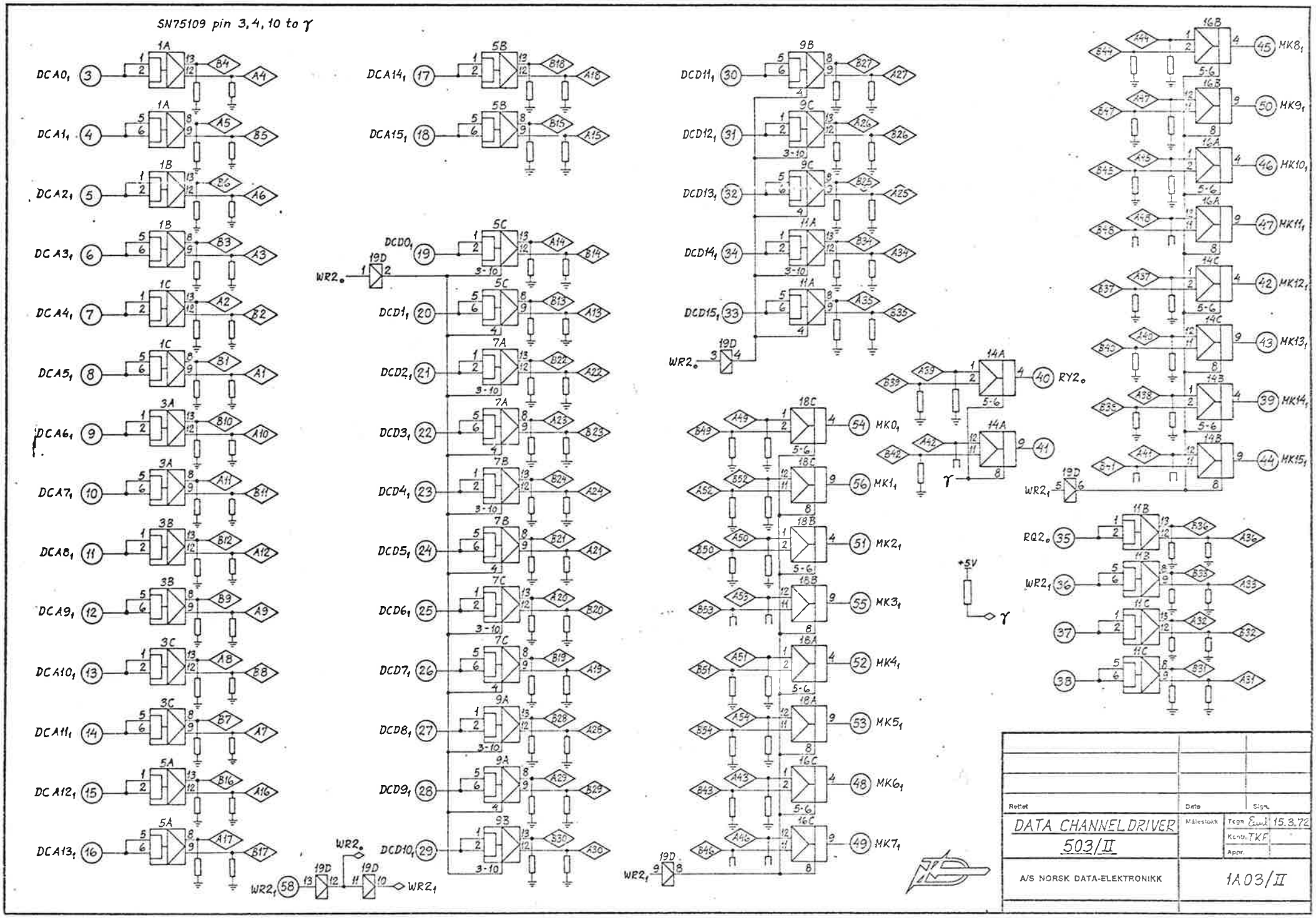
SN75109 pin 3,4,10 to γ
DCA0₁ 3
DCA1₁ 4
DCA2₁ 5
DCA3₁ 6
DCA4₁ 7
DCA5₁ 8
DCA6₁ 9
DCA7₁ 10
DCA8₁ 11
DCA9₁ 12
DCA10₁ 13
DCA11₁ 14
DCA12₁ 15
DCA13₁ 16
DCA14₁ 17
DCA15₁ 18
DCD0₁ 19
DCD1₁ 20
DCD2₁ 21
DCD3₁ 22
DCD4₁ 23
DCD5₁ 24
DCD6₁ 25
DCD7₁ 26
DCD8₁ 27
DCD9₁ 28
DCD10₁ 29
DCD11₁ 30
DCD12₁ 31
DCD13₁ 32
DCD14₁ 34
DCD15₁ 33
WR2₀
WR2₁ 58
WR2₁
RY2₀ 40
41
RQ2₀ 35
WR2₁ 36
37
38
MK0₁ 54
MK1₁ 56
MK2₁ 51
MK3₁ 55
MK4₁ 52
MK5₁ 53
MK6₁ 48
MK7₁ 49
MK8₁ 45
MK9₁ 50
MK10₁ 46
MK11₁ 47
MK12₁ 42
MK13₁ 43
MK14₁ 39
MK15₁ 44
+5V
γ
Rettet
Dato
Sign.
DATA CHANNEL DRIVER
503/II
Målestokk
Tegn
Kontr. TKF
Appr.
15.3.72
A/S NORSK DATA-ELEKTRONIKK
1A03/II

ND-01.005.01

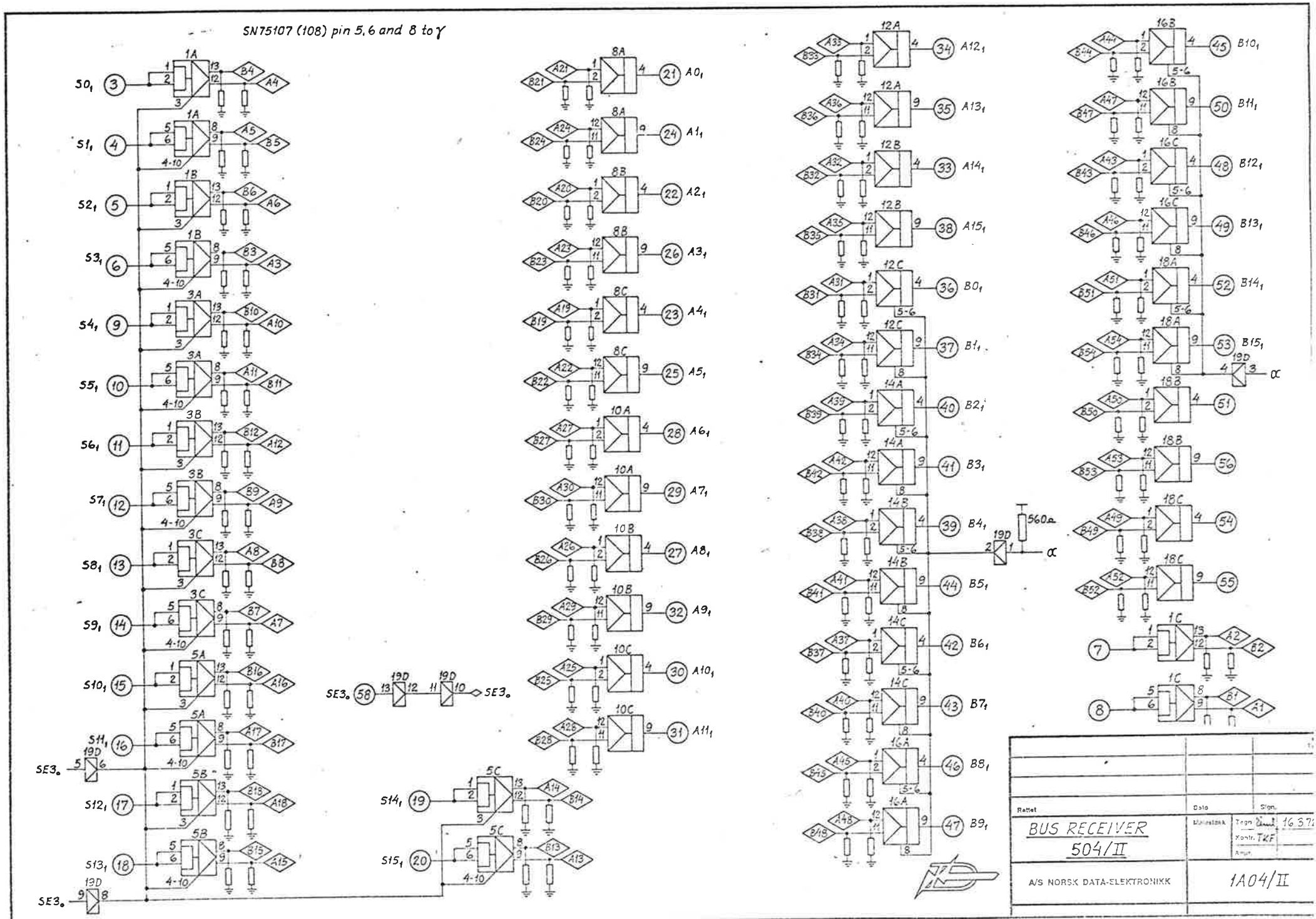
SN75107 (108) pin 5, 6 and 8 to γ
S0₁ 3
S1₁ 4
S2₁ 5
S3₁ 6
S4₁ 9
S5₁ 10
S6₁ 11
S7₁ 12
S8₁ 13
S9₁ 14
S10₁ 15
S11₁ 16
S12₁ 17
S13₁ 18
S14₁ 19
S15₁ 20
SE3₀ 58
SE3₀
A0₁ 21
A1₁ 24
A2₁ 22
A3₁ 26
A4₁ 23
A5₁ 25
A6₁ 28
A7₁ 29
A8₁ 27
A9₁ 32
A10₁ 30
A11₁ 31
A12₁ 34
A13₁ 35
A14₁ 33
A15₁ 38
B0₁ 36
B1₁ 37
B2₁ 40
B3₁ 41
B4₁ 39
B5₁ 44
B6₁ 42
B7₁ 43
B8₁ 46
B9₁ 47
B10₁ 45
B11₁ 50
B12₁ 48
B13₁ 49
B14₁ 52
B15₁ 53
560Ω
α
Rettet
Dato
Sign.
BUS RECEIVER
504/II
Materialstk
Tegn.
Kontr. TKF
Godkj.
16.3.7
A/S NORSK DATA-ELEKTRONIKK
1A04/II

ND-01.005.01

A/S NORSK DATA-ELEKTRONIKK
Erich Mogensøns vei 38, Oslo 5 - Tlf. 21 73 71

COMMENT AND EVALUATION SHEET

ND-01.005.01
September 1972

NORD-1 CONNECTORS

In order for this manual to develop to the point where it best suits your needs, we must have your comments, corrections, suggestions for additions, etc. Please write down your comments on this pre-addressed form and post it. Please be specific wherever possible.

FROM _____

_____

_____